LED NAVIGATION LIGHTS · VESSELS OF 50 M AND OVER

MOSNL50S

The compact single-housing LED navigation light series.
Twenty-two lights, one housing, MED approved.

MODELS	VISIBILITY	SUPPLY	LIFETIME
22	3–6 NM	24 V DC	60,000 h



01 Every light a larger vessel needs

MOSNL50S is a compact single LED navigation light for vessels of 50 m and over.

Its high-power LEDs give a range of 3–6 NM and clear visibility even at steep vertical angles, keeping the vessel easy to see for other traffic.

The series covers the lights a larger vessel needs: port, starboard, stern, towing and masthead sector lights; all-round lights in white, red, green and yellow, plus a manoeuvring light; and special Red Suez and Kiel Canal Green lights, plus white, red and yellow flash lights and 180° signal lights in white, red, green and yellow. Each model has its own order code, which makes specifying a complete set simple.

The hard-anodised, seawater-resistant aluminium housing, UV-resistant quartz glass lens and epoxy-coated LED driver are built to withstand demanding marine conditions. The compact body measures 84 × 110 × 75 mm and mounts with four 7 mm holes on a 63.61 mm square pitch.

With a rated lifetime of 60,000 hours, MOSNL50S keeps maintenance to a minimum. When service is needed, the main parts – from the quartz glass tube to the LED driver card – are available as spare parts, each with its own code.

MOSNL50S operates on 24 V DC, is rated IP67, works from −25 °C to +85 °C and is MED-approved (0437/23). It is produced by Marine Otomasyon Sistemleri under an ISO 9001:2015 quality management system.



01
Built for salt water
Hard-anodised aluminium body, quartz glass lens, stainless steel screws.

02
Sealed to IP67
Dust-tight and protected against temporary immersion.

03
60,000+ hours
High-power LEDs: years of service without lamp changes.

04
Thermal management
Epoxy-coated LED driver for maximum protection.

05
Seen from every angle
Clear visibility even at steep vertical angles.

06
Serviceable
Every main part, from quartz tube to driver card, has its own spare part code.

02 Twenty-two lights, one housing

Every model shares the same 84 × 110 × 75 mm body and mounting; models marked Ex are also available as an ATEX Ex version with the order code suffix -EX. Choose by light type; the drawing on each card shows the horizontal sector from above, bow up.

SECTOR LIGHTS



Masthead
310138 Ex
225° · 6 NM · 3.9 W



Port
310130 Ex
112.5° · 3 NM · 3.1 W



Starboard
310132 Ex
112.5° · 3 NM · 1.2 W



Stern White
310134 Ex
135° · 3 NM · 1.3 W



Towing
310136 Ex
135° · 3 NM · 1.8 W

ALL-ROUND LIGHTS



All-round White
310142 Ex
360° · 3 NM · 1.8 W



All-round Green
310146 Ex
360° · 3 NM · 1.7 W



All-round Red
310144 Ex
360° · 3 NM · 4.5 W



All-round Yellow
310150 Ex
360° · 3 NM · 2.3 W



Anchor Manoeuvre
310143 Ex
360° · 5 NM · 3.6 W

SPECIAL LIGHTS



Stern Kiel Canal Green
310135 Ex
135° · 3 NM · 0.9 W



Stern Suez Red
310133 Ex
135° · 3 NM · 3.1 W



Flash Light White 120/min
310140
360° · 3 NM · 1.8 W



Flash Light Red 120/min
310139
360° · 3 NM · 4.5 W



Flash Light Yellow 120/min
310157
360° · 3 NM · 2.3 W



Flash Light White 60/min
310098
360° · 3 NM · 1.8 W



Flash Light Red 60/min
310099
360° · 3 NM · 4.5 W



Flash Light Yellow 60/min
310097
360° · 3 NM · 2.3 W



Signal Light White
310137
180° · 3 NM · 1.8 W



Signal Light Red
310141
180° · 3 NM · 4.5 W



Signal Light Green
310145
180° · 3 NM · 1.7 W



Signal Light Yellow
310147
180° · 3 NM · 2.3 W

03 Model overview

All models: 24 V DC, IP67, −25 °C to +85 °C, MED approved.

LIGHT	COLOUR	SECTOR	VISIBILITY	POWER	ORDER CODE	EX VERSION
SECTOR LIGHTS						
Masthead	White	225°	6 NM	3.9 W	**310138**	310138-EX
Port	Red	112.5°	3 NM	3.1 W	**310130**	310130-EX
Starboard	Green	112.5°	3 NM	1.2 W	**310132**	310132-EX
Stern White	White	135°	3 NM	1.3 W	**310134**	310134-EX
Towing	Yellow	135°	3 NM	1.8 W	**310136**	310136-EX
ALL-ROUND LIGHTS						
All-round White	White	360°	3 NM	1.8 W	**310142**	310142-EX
All-round Green	Green	360°	3 NM	1.7 W	**310146**	310146-EX
All-round Red	Red	360°	3 NM	4.5 W	**310144**	310144-EX
All-round Yellow	Yellow	360°	3 NM	2.3 W	**310150**	310150-EX
Anchor Manoeuvre	White	360°	5 NM	3.6 W	**310143**	310143-EX
SPECIAL LIGHTS						
Stern Kiel Canal Green	Green	135°	3 NM	0.9 W	**310135**	310135-EX
Stern Suez Red	Red	135°	3 NM	3.1 W	**310133**	310133-EX
Flash Light White 120/min	White	360°	3 NM	1.8 W	**310140**	–
Flash Light Red 120/min	Red	360°	3 NM	4.5 W	**310139**	–
Flash Light Yellow 120/min	Yellow	360°	3 NM	2.3 W	**310157**	–
Flash Light White 60/min	White	360°	3 NM	1.8 W	**310098**	–
Flash Light Red 60/min	Red	360°	3 NM	4.5 W	**310099**	–
Flash Light Yellow 60/min	Yellow	360°	3 NM	2.3 W	**310097**	–
Signal Light White	White	180°	3 NM	1.8 W	**310137**	–
Signal Light Red	Red	180°	3 NM	4.5 W	**310141**	–
Signal Light Green	Green	180°	3 NM	1.7 W	**310145**	–
Signal Light Yellow	Yellow	180°	3 NM	2.3 W	**310147**	–

04 Technical data

Supply voltage	24 V DC
Visibility	3–6 NM
Light source	High-power LED
LED lifetime	> 60,000 h
Protection class	IP67
Operating temperature	–25 °C to +85 °C
Housing	Hard-anodised, seawater-resistant aluminium
Lens	UV-resistant quartz glass
LED driver	Epoxy-coated
Dimensions	84 × 110 × 75 mm
Weight	900 g
Mounting	4 × Ø7 mm holes, 63.61 mm square pitch
Cable	2 × 0.50 mm², M10 cable gland
Approval	MED Wheelmark 0437 · EN 14744 · IEC 60945 · COLREG 72
Ex versions	ATEX II 3G Ex ec IIC T4 Gc

SPARE PARTS

SP500119	Screw, stainless, M6 × 16 mm
SP500110	Cover, aluminium, 75 × 8 mm
SP500131	O-ring, silicone, 70 × 62 mm
SP500107	Quartz glass tube
SP500138	LED driver card
SP500101	Main housing, aluminium, R 110 mm
SP500122	Screw, stainless, M6 × 50 mm
SP500113	Cable, 2 × 0.50 mm²
SP500114	Cable gland, M10

DIMENSIONS · SIDE VIEW AND MOUNTING HOLES

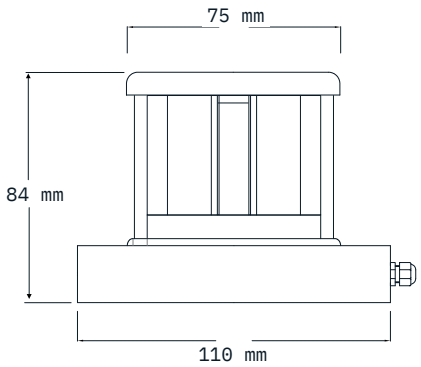

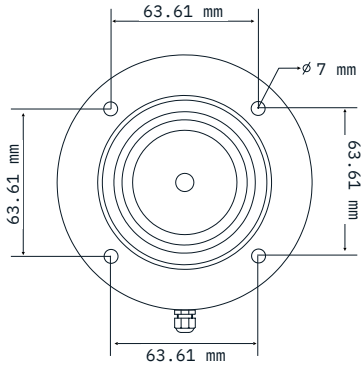

05 Approved and certified

MED Module B · EC type-examination	ME-C-0325/B/2/24 · notified body 0437 · valid to 29.12.2027
MED Module D · production quality assurance	ME-C-0696/D/1/26 · notified body 0437 · valid to 29.12.2027
ATEX · type examination	SCA25ATEXV061X · II 3G Ex ec IIC T4 Gc · Ex versions
Standards	EN 14744:2005 + AC:2006 · IEC 60945:2002 + Corr.1:2008 · COLREG 72 Annex I · IMO MSC.253(83) · EN IEC 60079-0 · EN 60079-7
Quality management	ISO 9001:2015



06 About MOS

Marine Automation Systems (MOS) has delivered marine services from Tuzla, Istanbul since 2009 and manufactures MED-approved LED navigation lights for newbuild and refit projects.

3,000+
projects in Turkey

3,200+
clients

12,500+
ships serviced

>85%
of revenue from repeat clients

Request a quote

Send us your light list or vessel length; we reply with the matching order codes and a quotation. Every model can be added to a quote on our website.

+90 216 447 12 90
info@mos.com.tr
navigationledlight.com/mosnl50s/
Marine Otomasyon Sistemleri Ltd. Şti.
Evliya Çelebi Mah. Rauf Orbay Cad. Ak İş Merkezi No:41/B,
34944 Tuzla – İstanbul, Türkiye