LED NAVIGATION LIGHTS · VESSELS UNDER 50 M

MOSNL50U

The compact single-housing LED navigation light series.
Sixteen lights, one housing, MED approved.

MODELS	VISIBILITY	SUPPLY	LIFETIME
16	2–5 NM	24 V DC	60,000 h



01 Small vessel, full set of lights

MOSNL50U is our most compact LED navigation light, designed for agile vessels under 50 m.

Its high-power LEDs give a range of 2–5 NM and clear visibility even at steep vertical angles, keeping the vessel easy to see for other traffic.

The series covers the lights a smaller vessel needs: port, starboard, stern, towing and masthead sector lights; all-round lights in white, red, green and yellow; and special Red Suez and Kiel Canal Green lights, plus 180° signal lights in white, red, green and yellow. Each model has its own order code, which makes specifying a complete set simple.

The hard-anodised, seawater-resistant aluminium housing, UV-resistant quartz glass lens and epoxy-coated LED driver are built to withstand demanding marine conditions. The compact body measures 84 × 110 × 75 mm and mounts with four 7 mm holes on a 63.61 mm square pitch.

With a rated lifetime of 60,000 hours, MOSNL50U keeps maintenance to a minimum. When service is needed, the main parts – from the quartz glass tube to the LED driver card – are available as spare parts, each with its own code.

MOSNL50U operates on 24 V DC, is rated IP67, works from −25 °C to +85 °C and is MED-approved (0437/23). It is produced by Marine Otomasyon Sistemleri under an ISO 9001:2015 quality management system.



01

Built for salt water

Hard-anodised aluminium body, quartz glass lens, stainless steel screws.

02

Sealed to IP67

Dust-tight and protected against temporary immersion.

03

60,000+ hours

High-power LEDs: years of service without lamp changes.

04

Thermal management

Epoxy-coated LED driver for maximum protection.

05

Seen from every angle

Clear visibility even at steep vertical angles.

06

Serviceable

Every main part, from quartz tube to driver card, has its own spare part code.

02 Sixteen lights, one housing

Every model shares the same 84 × 110 × 75 mm body and mounting. Choose by light type; the drawing on each card shows the horizontal sector from above, bow up.

SECTOR LIGHTS



Masthead 3 NM

310108
225° · 3 NM · 0.6 W



Masthead 5 NM

310109
225° · 5 NM · 1.8 W



Port

310100
112.5° · 2 NM · 1.4 W



Starboard

310102
112.5° · 2 NM · 0.6 W



Stern White

310104
135° · 2 NM · 1.7 W



Towing

310106
135° · 2 NM · 1.1 W

ALL-ROUND LIGHTS



All-round White

310112
360° · 2 NM · 1.5 W



All-round Green

310116
360° · 2 NM · 1.5 W



All-round Red

310114
360° · 2 NM · 3.2 W



All-round Yellow

310120
360° · 2 NM · 1.4 W

SPECIAL LIGHTS



Stern Kiel Canal Green

310105
135° · 2 NM · 0.7 W



Stern Suez Red

310103
135° · 2 NM · 3.1 W



Signal Light White

310113
180° · 2 NM · 1.5 W



Signal Light Red

310115
180° · 2 NM · 3.2 W



Signal Light Green

310121
180° · 2 NM · 1.5 W



Signal Light Yellow

310122
180° · 2 NM · 1.4 W

03 Model overview

All models: 24 V DC, IP67, −25 °C to +85 °C, MED approved.

LIGHT	COLOUR	SECTOR	VISIBILITY	POWER	ORDER CODE
SECTOR LIGHTS					
Masthead 3 NM	White	225°	3 NM	0.6 W	**310108**
Masthead 5 NM	White	225°	5 NM	1.8 W	**310109**
Port	Red	112.5°	2 NM	1.4 W	**310100**
Starboard	Green	112.5°	2 NM	0.6 W	**310102**
Stern White	White	135°	2 NM	1.7 W	**310104**
Towing	Yellow	135°	2 NM	1.1 W	**310106**
ALL-ROUND LIGHTS					
All-round White	White	360°	2 NM	1.5 W	**310112**
All-round Green	Green	360°	2 NM	1.5 W	**310116**
All-round Red	Red	360°	2 NM	3.2 W	**310114**
All-round Yellow	Yellow	360°	2 NM	1.4 W	**310120**
SPECIAL LIGHTS					
Stern Kiel Canal Green	Green	135°	2 NM	0.7 W	**310105**
Stern Suez Red	Red	135°	2 NM	3.1 W	**310103**
Signal Light White	White	180°	2 NM	1.5 W	**310113**
Signal Light Red	Red	180°	2 NM	3.2 W	**310115**
Signal Light Green	Green	180°	2 NM	1.5 W	**310121**
Signal Light Yellow	Yellow	180°	2 NM	1.4 W	**310122**

04 Technical data

Supply voltage	24 V DC
Visibility	2–5 NM
Light source	High-power LED
LED lifetime	> 60,000 h
Protection class	IP67
Operating temperature	–25 °C to +85 °C
Housing	Hard-anodised, seawater-resistant aluminium
Lens	UV-resistant quartz glass
LED driver	Epoxy-coated
Dimensions	84 × 110 × 75 mm
Weight	900 g
Mounting	4 × Ø7 mm holes, 63.61 mm square pitch
Cable	2 × 0.50 mm², M10 cable gland
Approval	MED Wheelmark 0437 · EN 14744 · IEC 60945 · COLREG 72

SPARE PARTS

SP500119	Screw, stainless, M6 × 16 mm
SP500110	Cover, aluminium, 75 × 8 mm
SP500131	O-ring, silicone, 70 × 62 mm
SP500107	Quartz glass tube
SP500138	LED driver card
SP500101	Main housing, aluminium, R 110 mm
SP500122	Screw, stainless, M6 × 50 mm
SP500113	Cable, 2 × 0.50 mm²
SP500114	Cable gland, M10

DIMENSIONS · SIDE VIEW AND MOUNTING HOLES

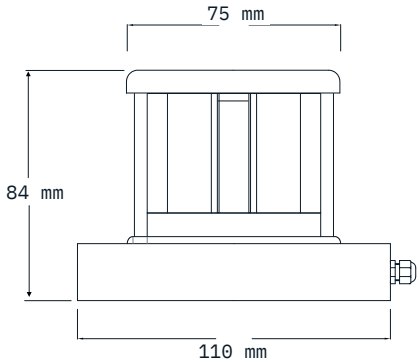

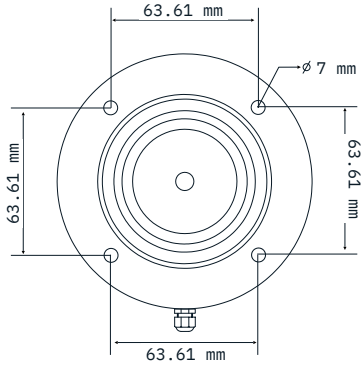

05 Approved and certified

MED Module B · EC type-examination	ME-C-0325/B/2/24 · notified body 0437 · valid to 29.12.2027
MED Module D · production quality assurance	ME-C-0696/D/1/26 · notified body 0437 · valid to 29.12.2027
Standards	EN 14744:2005 + AC:2006 · IEC 60945:2002 + Corr.1:2008 · COLREG 72 Annex I · IMO MSC.253(83)
Quality management	ISO 9001:2015



06 About MOS

Marine Automation Systems (MOS) has delivered marine services from Tuzla, Istanbul since 2009 and manufactures MED-approved LED navigation lights for newbuild and refit projects.

3,000+
projects in Turkey

3,200+
clients

12,500+
ships serviced

>85%
of revenue from repeat clients

Request a quote

Send us your light list or vessel length; we reply with the matching order codes and a quotation. Every model can be added to a quote on our website.

+90 216 447 12 90
info@mos.com.tr
navigationledlight.com/mosnl50u/
Marine Otomasyon Sistemleri Ltd. Şti.
Evliya Çelebi Mah. Rauf Orbay Cad. Ak İş Merkezi No:41/B,
34944 Tuzla – İstanbul, Türkiye