LED NAVIGATION LIGHTS · VESSELS UNDER 50 M

MOSNL50UD

The double-housing LED navigation light series: main and stand-by light in one body. Sixteen lights, MED approved.

MODELS	VISIBILITY	SUPPLY	LIFETIME
16	2–5 NM	24 V DC	60,000 h



IP67 UV

01 Main and stand-by in one housing

MOSNL50UD is a compact double LED navigation light for agile vessels under 50 m.

Two independent light units are stacked in one housing to serve as the main and the stand-by light, with switching between them handled by the vessel's navigation light control panel. Its high-power LEDs give a range of 2–5 NM and clear visibility even at steep vertical angles.

The series covers the lights a smaller vessel needs: port, starboard, stern, towing and masthead sector lights; all-round lights in white, red, green and yellow; and special Red Suez and Kiel Canal Green lights, plus 180° signal lights in white, red, green and yellow. Each model has its own order code, which makes specifying a complete set simple.

The hard-anodised, seawater-resistant aluminium housing, UV-resistant quartz glass lenses and epoxy-coated LED drivers are built to withstand demanding marine conditions. The body measures 154 × 110 × 75 mm and uses the same mounting as the single light: four 7 mm holes on a 63.61 mm square pitch.

With a rated lifetime of 60,000 hours, MOSNL50UD keeps maintenance to a minimum. When service is needed, the main parts – from the quartz glass tubes to the LED driver cards – are available as spare parts, each with its own code.

MOSNL50UD operates on 24 V DC, is rated IP67, works from −25 °C to +85 °C and is MED-approved (0437/23). It is produced by Marine Otomasyon Sistemleri under an ISO 9001:2015 quality management system.



01
Built for salt water
Hard-anodised aluminium body, quartz glass lens, stainless steel screws.

02
Sealed to IP67
Dust-tight and protected against temporary immersion.

03
60,000+ hours
High-power LEDs: years of service without lamp changes.

04
Thermal management
Epoxy-coated LED driver for maximum protection.

05
Seen from every angle
Clear visibility even at steep vertical angles.

06
Serviceable
Every main part, from quartz tube to driver card, has its own spare part code.

02 Sixteen lights, one housing

Every model shares the same 154 × 110 × 75 mm body and mounting. Choose by light type; the drawing on each card shows the horizontal sector from above, bow up.

SECTOR LIGHTS



Masthead 3 NM

310194
225° · 3 NM · 0.6 W



Masthead 5 NM

310196
225° · 5 NM · 1.8 W



Port

310182
112.5° · 2 NM · 1.4 W



Starboard

310184
112.5° · 2 NM · 0.6 W



Stern White

310188
135° · 2 NM · 1.7 W



Towing

310192
135° · 2 NM · 1.1 W

ALL-ROUND LIGHTS



All-round White

310200
360° · 2 NM · 1.5 W



All-round Green

310204
360° · 2 NM · 1.5 W



All-round Red

310202
360° · 2 NM · 3.2 W



All-round Yellow

310208
360° · 2 NM · 1.4 W

SPECIAL LIGHTS

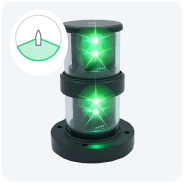

Stern Kiel Canal Green

310190
135° · 2 NM · 0.7 W



Stern Suez Red

310186
135° · 2 NM · 3.1 W



Signal Light White

310209
180° · 2 NM · 3 W



Signal Light Red

310210
180° · 2 NM · 6.4 W



Signal Light Green

310211
180° · 2 NM · 3 W



Signal Light Yellow

310212
180° · 2 NM · 2.8 W

03 Model overview

All models: 24 V DC, IP67, −25 °C to +85 °C, MED approved.

LIGHT	COLOUR	SECTOR	VISIBILITY	POWER	ORDER CODE
SECTOR LIGHTS					
 Masthead 3 NM	White	225°	3 NM	0.6 W	**310194**
 Masthead 5 NM	White	225°	5 NM	1.8 W	**310196**
 Port	Red	112.5°	2 NM	1.4 W	**310182**
 Starboard	Green	112.5°	2 NM	0.6 W	**310184**
 Stern White	White	135°	2 NM	1.7 W	**310188**
 Towing	Yellow	135°	2 NM	1.1 W	**310192**
ALL-ROUND LIGHTS					
 All-round White	White	360°	2 NM	1.5 W	**310200**
 All-round Green	Green	360°	2 NM	1.5 W	**310204**
 All-round Red	Red	360°	2 NM	3.2 W	**310202**
 All-round Yellow	Yellow	360°	2 NM	1.4 W	**310208**
SPECIAL LIGHTS					
 Stern Kiel Canal Green	Green	135°	2 NM	0.7 W	**310190**
 Stern Suez Red	Red	135°	2 NM	3.1 W	**310186**
 Signal Light White	White	180°	2 NM	3 W	**310209**
 Signal Light Red	Red	180°	2 NM	6.4 W	**310210**
 Signal Light Green	Green	180°	2 NM	3 W	**310211**
 Signal Light Yellow	Yellow	180°	2 NM	2.8 W	**310212**

04 Technical data

Supply voltage	24 V DC
Visibility	2–5 NM
Light source	High-power LED
LED lifetime	> 60,000 h
Protection class	IP67
Operating temperature	–25 °C to +85 °C
Housing	Hard-anodised, seawater-resistant aluminium
Lens	UV-resistant quartz glass
LED driver	Epoxy-coated
Dimensions	154 × 110 × 75 mm
Weight	1500 g
Mounting	4 × Ø7 mm holes, 63.61 mm square pitch
Cable	2 × 0.50 mm², cable gland
Approval	MED Wheelmark 0437 · EN 14744 · IEC 60945 · COLREG 72

SPARE PARTS

SP500120	Screw, stainless, M6 × 100 mm
SP500110	Cover, aluminium, 75 × 8 mm
SP500131	O-ring, silicone, 70 × 62 mm
SP500107	Quartz glass tube
SP500102	Main housing, aluminium, R 80 mm
SP500138	LED driver card
SP500101	Main housing, aluminium, R 110 mm
SP500113	Cable, 2 × 0.50 mm²
SP500122	Screw, stainless, M6 × 50 mm
SP500114	Cable gland

DIMENSIONS · SIDE VIEW AND MOUNTING HOLES

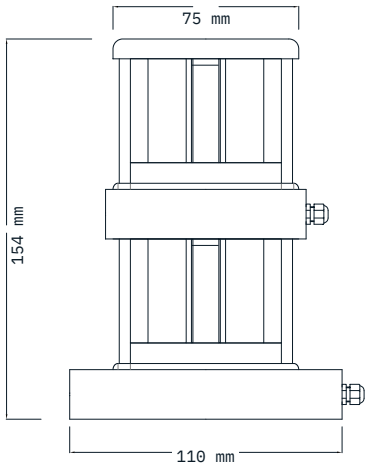

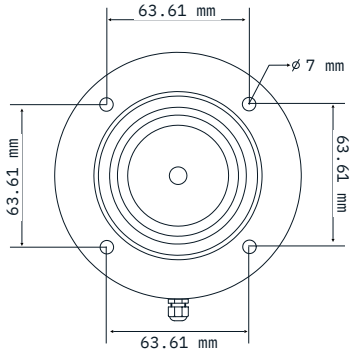

05 Approved and certified

MED Module B · EC type-examination	ME-C-0325/B/2/24 · notified body 0437 · valid to 29.12.2027
MED Module D · production quality assurance	ME-C-0696/D/1/26 · notified body 0437 · valid to 29.12.2027
Standards	EN 14744:2005 + AC:2006 · IEC 60945:2002 + Corr.1:2008 · COLREG 72 Annex I · IMO MSC.253(83)
Quality management	ISO 9001:2015

IP67 UV

06 About MOS

Marine Automation Systems (MOS) has delivered marine services from Tuzla, Istanbul since 2009 and manufactures MED-approved LED navigation lights for newbuild and refit projects.

3,000+
projects in Turkey

3,200+
clients

12,500+
ships serviced

>85%
of revenue from repeat clients

Request a quote

Send us your light list or vessel length; we reply with the matching order codes and a quotation. Every model can be added to a quote on our website.

+90 216 447 12 90
info@mos.com.tr
navigationledlight.com/mosnl50ud/
Marine Otomasyon Sistemleri Ltd. Şti.
Evliya Çelebi Mah. Rauf Orbay Cad. Ak İş Merkezi No:41/B,
34944 Tuzla – İstanbul, Türkiye