MARINE OTOMASYON SİSTEMLERİ

Marine Automation Systems

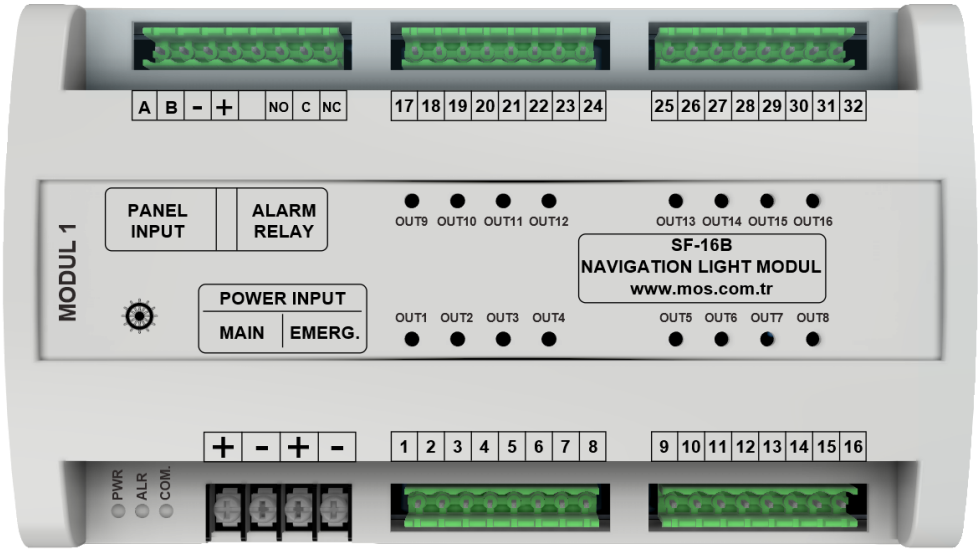

Navigation & Signal Light Controller

SF-16B

DATA SHEET

Document: **SF-16B-DS**
Date: April 2026

Revision: 2.0
www.marineotomasyon.com.tr

TABLE OF CONTENTS

1. Overview & Specifications 3

Product Description 3

Detailed Specifications 3

2. Terminal Layout & Pin Assignment 4

Power Input — Top-Left Block 4

Communication / Auxiliary / Alarm — Top-Right Block 4

Light Outputs — Channels 1 to 16 4

3. Mechanical Drawings 5

Side View 5

Front View 5

4. Sample Connection Diagram 6

OVERVIEW

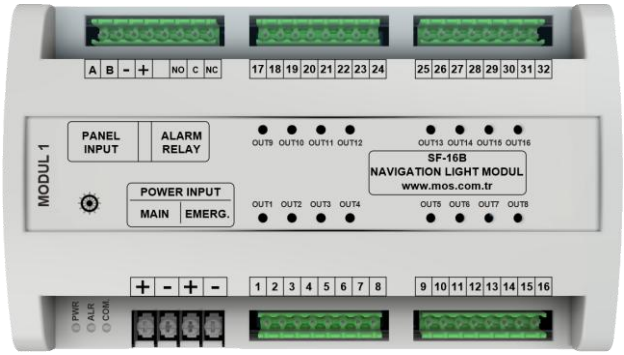

Product Description

The SF-16B is a 16-channel controller for navigation and signal lights in marine applications. The module accepts redundant Main and Emergency 24 VDC inputs and drives each light at up to 2 A, with every output individually protected by a 2 A resetable fuse and short-circuit protection.

RS-485 communication, an auxiliary 24 VDC output, NO/NC alarm contacts, output dimming and per-channel current monitoring for lamp-lifetime calculation are provided as standard. The SF-16B is COLREG compliant and MED certified.

SPECIFICATIONS

GENERAL	
Model	SF-16B
Application	Navigation & Signal Light Control
Dimensions (W × H × D)	190 × 112 × 55 mm
POWER SUPPLY	
Main Supply Input	24 VDC ±20 % (19.2 – 28.8 VDC)
Emergency Supply Input	24 VDC ±20 % (19.2 – 28.8 VDC)
OUTPUTS	
Number Of Light Outputs	16 (Navigation / Signal Lights)
Output Voltage	24 VDC
Output Current (Max.)	2 A per channel
Auxiliary Output	24 VDC, 2 A
PER-CHANNEL PROTECTION	
Resetable Fuse	2 A per output channel
Short-Circuit Protection	Per output channel
FUNCTIONS	
Output Dimming	Supported
Lamp Current Monitoring	Per-channel current measurement, recorded for lamp-lifetime calculation
COMMUNICATION & ALARM	
Communication Interface	RS-485 (A, B)
Alarm Contacts	NO, NC
COMPLIANCE & CERTIFICATION	
Regulation Compliance	COLREG 72
Type Approval	MED CERTIFIED (0437/23)

TERMINAL LAYOUT & PIN ASSIGNMENT

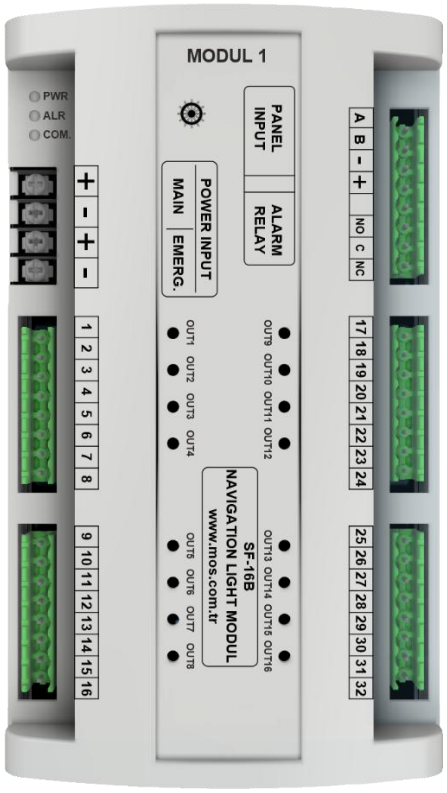

Front view — terminal numbering as seen from the front of the module.

Power Input (Top-Left Block)

Mark	Function
+	MAİN 24 VDC SUPPLY — POSITIVE
−	MAİN 24 VDC SUPPLY — RETURN
+	EMERGENCY 24 VDC SUPPLY — POSITIVE
−	EMERGENCY 24 VDC SUPPLY — RETURN

Communication / Auxiliary / Alarm (Top-Right Block)

Mark	Function
A	RS-485 — A
B	RS-485 — B
+	AUXİLİARY 24 VDC OUTPUT — POSITIVE
−	AUXİLİARY 24 VDC OUTPUT — RETURN
NO	ALARM CONTACT — NORMALLY OPEN
NC	ALARM CONTACT — NORMALLY CLOSED

Light Outputs — Channels 1 to 16

Each channel uses two adjacent terminals — odd numbered terminals are positive (+24 VDC), the next even numbered terminal is the return. Each output channel is protected by a 2 A resetable fuse and short-circuit protection.

Channel	+ Term.	− Term.
CH1	1	2
CH2	3	4
CH3	5	6
CH4	7	8
CH5	9	10
CH6	11	12
CH7	13	14
CH8	15	16

Channel	+ Term.	− Term.
CH9	17	18
CH10	19	20
CH11	21	22
CH12	23	24
CH13	25	26
CH14	27	28
CH15	29	30
CH16	31	32

MECHANICAL DRAWINGS

Side View (mm)

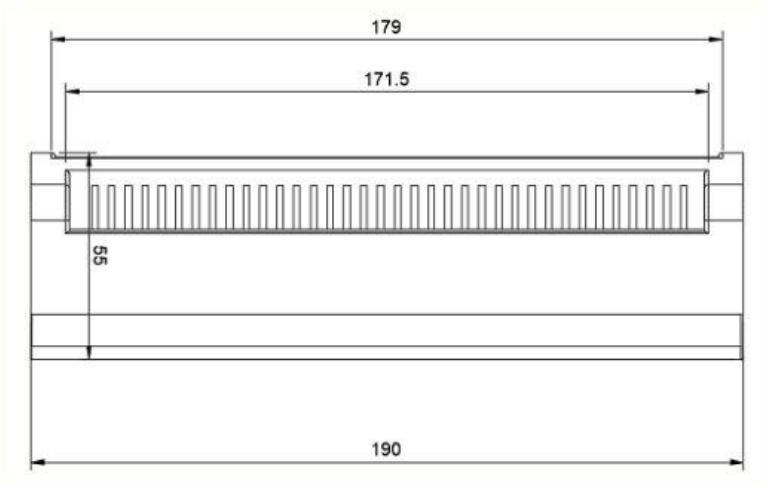

Front View (mm)

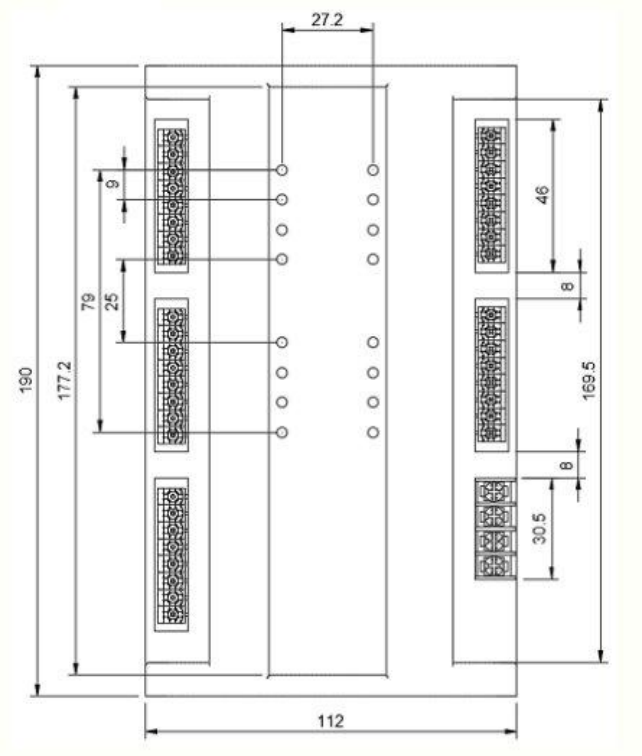

All dimensions in millimetres.

SAMPLE CONNECTION DIAGRAM

