ORDER CODE

# 310172 / 310172-EX

## MOSNL50D All Round White 360°

Vessels of 50 m and over · 3 NM · 3.3 W · 24 V DC · IP67 · MED



Fig. 1 · MOSNL50D double housing

Fig. 2 **Horizontal sector**

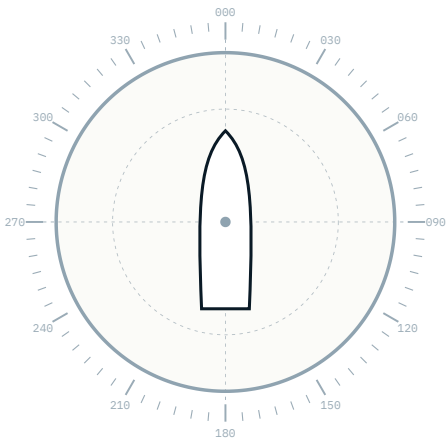


Shows an unbroken white light over the whole horizon of 360°.

### LIGHT

| | |
|---|---|
| Type | All Round White 360° |
| Colour | White |
| Horizontal sector | 360° |
| Visibility (range) | 3 NM |
| Light source | High-power LED |
| LED lifetime | > 60,000 h |

### ELECTRICAL

| | |
|---|---|
| Supply voltage | 24 V DC |
| Power consumption | 3.3 W |

### MECHANICAL

| | |
|---|---|
| Housing | Hard-anodised, saltwater-resistant aluminium |
| Lens | UV-resistant quartz glass |
| Screws | Stainless steel |
| Dimensions (H × base × top) | 154 × 110 × 75 mm |
| Mounting holes | 4 × Ø7 mm on a 63.61 × 63.61 mm square |
| Weight | 1500 g |

### ENVIRONMENT

| | |
|---|---|
| Protection class | IP67 |
| Operating temperature | −25 °C to +85 °C |

### APPROVALS

| | |
|---|---|
| Marine equipment | MED Wheelmark, Directive 2014/90/EU, item MED/6.1 |
| Standards | EN 14744:2005 + AC:2006 · IEC 60945:2002 + Corr.1:2008 · COLREG 72 Annex I |
| Explosion protection | ATEX II 3G Ex ec IIC T4 Gc (Ex version) |

## 01 Dimensions

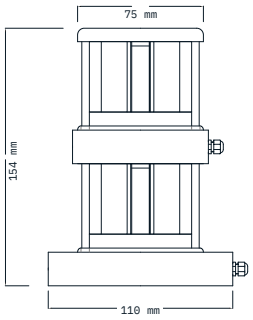


Fig. 3 · Side view, double housing · 154 × 110 × 75 mm

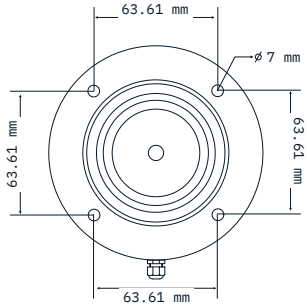


Fig. 4 · Plan view, mounting holes 4 × Ø7 mm

## 02 Design features

01
### Built for salt water
Hard-anodised aluminium body, quartz glass lens and stainless steel screws.

02
### Sealed to IP67
Dust-tight and protected against temporary immersion.

03
### 60,000+ hours
High-power LED source: years of service without lamp changes.

04
### Thermal management
Epoxy-coated LED driver, protected for maximum service life.

05
### −25 to +85 °C
Operating range for every climate and season at sea.

06
### Maintenance friendly
No bulbs to replace, robust design for long intervals.

## 03 Ordering information

| CODE | DESCRIPTION | VERSION |
|---|---|---|
| 310172 | MOSNL50D All Round White 360° | Standard version |
| 310172-EX | MOSNL50D All Round White 360° Ex | ATEX Zone 2 · II 3G Ex ec IIC T4 Gc |

## 04 Certificates

| | | |
|---|---|---|
| **MED Module B** | ME-C-0325/B/2/24<br>EC type-examination<br>Notified body 0437 · valid to 29.12.2027 |
| **MED Module D** | ME-C-0696/D/1/26<br>Production quality assurance<br>Notified body 0437 · valid to 29.12.2027 |
| **ATEX** | SCA25ATEXV061X<br>Type examination, Directive 2014/34/EU<br>II 3G Ex ec IIC T4 Gc |

## 05 Standards

- EN 14744:2005 incl. AC:2006 – navigation lights
- IEC 60945:2002 incl. Corr.1:2008 – maritime equipment, EMC and environment
- COLREG 72, Annex I – positioning and technical details of lights
- IMO Res. MSC.253(83) – performance standards for navigation lights
- EN IEC 60079-0:2018, EN 60079-7:2015/A1:2018 – explosive atmospheres

**Marine Otomasyon Sistemleri Ltd. Şti.**
Evliya Çelebi Mah. Rauf Orbay Cad. Ak İş Merkezi No:41/B, 34944 Tuzla – İstanbul, Türkiye
+90 216 447 12 90 · info@mos.com.tr · navigationledlight.com