ORDER CODE

310160 / 310160-EX

MOSNL50D Port 112.5°

Vessels of 50 m and over · 3 NM · 6 W · 24 V DC · IP67 · MED



Fig. 1 · MOSNL50D double housing

Fig. 2 **Horizontal sector**

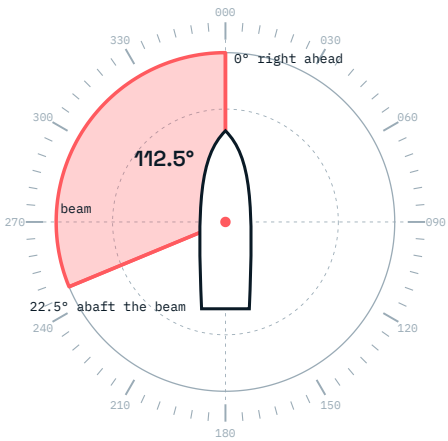

Shows an unbroken red light over 112.5° of the horizon, from right ahead to 22.5° abaft the beam on the port side.

Fitted in pairs with MOSNL50D Starboard 112.5°, order code 310162.

LIGHT

Type	Port 112.5°
Colour	Red
Horizontal sector	112.5°
Visibility (range)	3 NM
Light source	High-power LED
LED lifetime	> 60,000 h

ELECTRICAL

Supply voltage	24 V DC
Power consumption	6 W

MECHANICAL

Housing	Hard-anodised, saltwater-resistant aluminium
Lens	UV-resistant quartz glass
Screws	Stainless steel
Dimensions (H × base × top)	154 × 110 × 75 mm
Mounting holes	4 × Ø7 mm on a 63.61 × 63.61 mm square
Weight	1500 g

ENVIRONMENT

Protection class	IP67
Operating temperature	−25 °C to +85 °C

APPROVALS

Marine equipment	MED Wheelmark, Directive 2014/90/EU, item MED/6.1
Standards	EN 14744:2005 + AC:2006 · IEC 60945:2002 + Corr.1:2008 · COLREG 72 Annex I
Explosion protection	ATEX II 3G Ex ec IIC T4 Gc (Ex version)

01 Dimensions

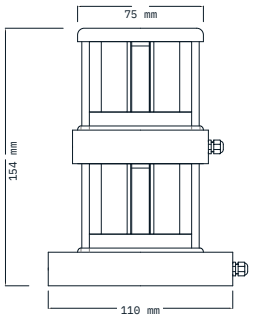

Fig. 3 · Side view, double housing · 154 × 110 × 75 mm

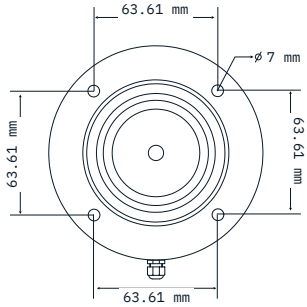

Fig. 4 · Plan view, mounting holes 4 × Ø7 mm

02 Design features

01
Built for salt water
Hard-anodised aluminium body, quartz glass lens and stainless steel screws.

02
Sealed to IP67
Dust-tight and protected against temporary immersion.

03
60,000+ hours
High-power LED source: years of service without lamp changes.

04
Thermal management
Epoxy-coated LED driver, protected for maximum service life.

05
−25 to +85 °C
Operating range for every climate and season at sea.

06
Maintenance friendly
No bulbs to replace, robust design for long intervals.

03 Ordering information

CODE	DESCRIPTION	VERSION
310160	MOSNL50D Port 112.5°	Standard version
310160-EX	MOSNL50D Port 112.5° Ex	ATEX Zone 2 · II 3G Ex ec IIC T4 Gc

04 Certificates

MED Module B
ME-C-0325/B/2/24
EC type-examination
Notified body 0437 · valid to 29.12.2027

MED Module D
ME-C-0696/D/1/26
Production quality assurance
Notified body 0437 · valid to 29.12.2027

ATEX
SCA25ATEXV061X
Type examination, Directive 2014/34/EU
II 3G Ex ec IIC T4 Gc

05 Standards

- EN 14744:2005 incl. AC:2006 – navigation lights
- IEC 60945:2002 incl. Corr.1:2008 – maritime equipment, EMC and environment
- COLREG 72, Annex I – positioning and technical details of lights
- IMO Res. MSC.253(83) – performance standards for navigation lights
- EN IEC 60079-0:2018, EN 60079-7:2015/A1:2018 – explosive atmospheres

Marine Otomasyon Sistemleri Ltd. Şti.
Evliya Çelebi Mah. Rauf Orbay Cad. Ak İş Merkezi No:41/B, 34944 Tuzla – İstanbul, Türkiye
+90 216 447 12 90 · info@mos.com.tr · navigationledlight.com