ORDER CODE

# 310114

## MOSNL50U All Round Red 360°

Vessels under 50 m · 2 NM · 3.2 W · 24 V DC · IP67 · MED



Fig. 1 · MOSNL50U single housing

Fig. 2 **Horizontal sector**

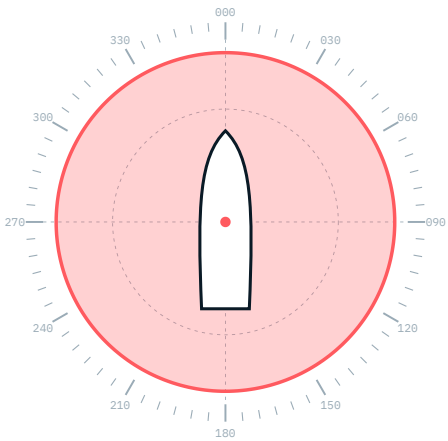


Shows an unbroken red light over the whole horizon of 360°.

### LIGHT

| | |
|---|---|
| Type | All Round Red 360° |
| Colour | Red |
| Horizontal sector | 360° |
| Visibility (range) | 2 NM |
| Light source | High-power LED |
| LED lifetime | > 60,000 h |

### ELECTRICAL

| | |
|---|---|
| Supply voltage | 24 V DC |
| Power consumption | 3.2 W |

### MECHANICAL

| | |
|---|---|
| Housing | Hard-anodised, saltwater-resistant aluminium |
| Lens | UV-resistant quartz glass |
| Screws | Stainless steel |
| Dimensions (H × base × top) | 84 × 110 × 75 mm |
| Mounting holes | 4 × Ø7 mm on a 63.61 × 63.61 mm square |
| Weight | 900 g |

### ENVIRONMENT

| | |
|---|---|
| Protection class | IP67 |
| Operating temperature | −25 °C to +85 °C |

### APPROVALS

| | |
|---|---|
| Marine equipment | MED Wheelmark, Directive 2014/90/EU, item MED/6.1 |
| Standards | EN 14744:2005 + AC:2006 · IEC 60945:2002 + Corr.1:2008 · COLREG 72 Annex I |

## 01 Dimensions

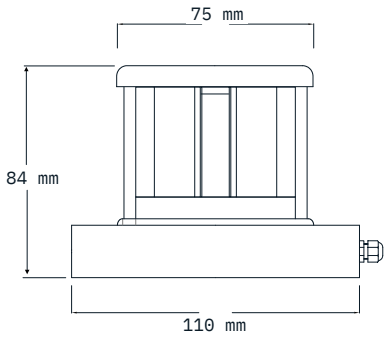


Fig. 3 · Side view, single housing · 84 × 110 × 75 mm

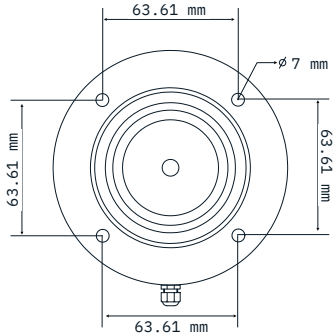


Fig. 4 · Plan view, mounting holes 4 × Ø7 mm

## 02 Design features

01

### Built for salt water

Hard-anodised aluminium body, quartz glass lens and stainless steel screws.

02

### Sealed to IP67

Dust-tight and protected against temporary immersion.

03

### 60,000+ hours

High-power LED source: years of service without lamp changes.

04

### Thermal management

Epoxy-coated LED driver, protected for maximum service life.

05

### −25 to +85 °C

Operating range for every climate and season at sea.

06

### Maintenance friendly

No bulbs to replace, robust design for long intervals.

## 03 Ordering information

| CODE | DESCRIPTION | VERSION |
|---|---|---|
| **310114** | MOSNL50U All Round Red 360° | Standard version |

## 04 Certificates

**MED Module B**
ME-C-0325/B/2/24
EC type-examination
Notified body 0437 · valid to 29.12.2027

**MED Module D**
ME-C-0696/D/1/26
Production quality assurance
Notified body 0437 · valid to 29.12.2027

## 05 Standards

EN 14744:2005 incl. AC:2006 – navigation lights

IEC 60945:2002 incl. Corr.1:2008 – maritime equipment, EMC and environment

COLREG 72, Annex I – positioning and technical details of lights

IMO Res. MSC.253(83) – performance standards for navigation lights

**Marine Otomasyon Sistemleri Ltd. Şti.**
Evliya Çelebi Mah. Rauf Orbay Cad. Ak İş Merkezi No:41/B, 34944 Tuzla – İstanbul, Türkiye
+90 216 447 12 90 · info@mos.com.tr · navigationledlight.com