ORDER CODE

310202

MOSNL50UD All Round Red 360°

Vessels under 50 m · 2 NM · 3.2 W · 24 V DC · IP67 · MED



Fig. 1 · MOSNL50UD double housing

Fig. 2 **Horizontal sector**

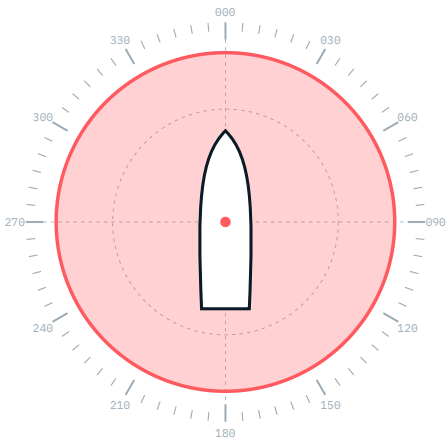

Shows an unbroken red light over the whole horizon of 360°.

LIGHT

Type	All Round Red 360°
Colour	Red
Horizontal sector	360°
Visibility (range)	2 NM
Light source	High-power LED
LED lifetime	> 60,000 h

ELECTRICAL

Supply voltage	24 V DC
Power consumption	3.2 W

MECHANICAL

Housing	Hard-anodised, saltwater-resistant aluminium
Lens	UV-resistant quartz glass
Screws	Stainless steel
Dimensions (H × base × top)	154 × 110 × 75 mm
Mounting holes	4 × Ø7 mm on a 63.61 × 63.61 mm square
Weight	1500 g

ENVIRONMENT

Protection class	IP67
Operating temperature	−25 °C to +85 °C

APPROVALS

Marine equipment	MED Wheelmark, Directive 2014/90/EU, item MED/6.1
Standards	EN 14744:2005 + AC:2006 · IEC 60945:2002 + Corr.1:2008 · COLREG 72 Annex I

01 Dimensions

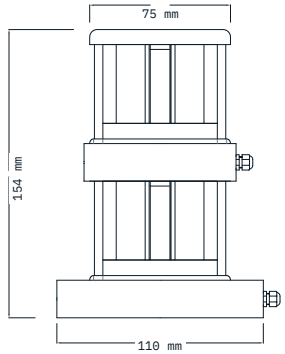

Fig. 3 · Side view, double housing · 154 × 110 × 75 mm

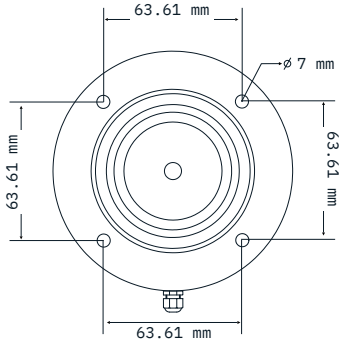

Fig. 4 · Plan view, mounting holes 4 × Ø7 mm

02 Design features

01
Built for salt water
Hard-anodised aluminium body, quartz glass lens and stainless steel screws.

02
Sealed to IP67
Dust-tight and protected against temporary immersion.

03
60,000+ hours
High-power LED source: years of service without lamp changes.

04
Thermal management
Epoxy-coated LED driver, protected for maximum service life.

05
−25 to +85 °C
Operating range for every climate and season at sea.

06
Maintenance friendly
No bulbs to replace, robust design for long intervals.

03 Ordering information

CODE	DESCRIPTION	VERSION
310202	MOSNL50UD All Round Red 360°	Standard version

04 Certificates

MED Module B
ME-C-0325/B/2/24
EC type-examination
Notified body 0437 · valid to 29.12.2027

MED Module D
ME-C-0696/D/1/26
Production quality assurance
Notified body 0437 · valid to 29.12.2027

05 Standards

EN 14744:2005 incl. AC:2006 – navigation lights

IEC 60945:2002 incl. Corr.1:2008 – maritime equipment, EMC and environment

COLREG 72, Annex I – positioning and technical details of lights

IMO Res. MSC.253(83) – performance standards for navigation lights

Marine Otomasyon Sistemleri Ltd. Şti.
Evliya Çelebi Mah. Rauf Orbay Cad. Ak İş Merkezi No:41/B, 34944 Tuzla – İstanbul, Türkiye
+90 216 447 12 90 · info@mos.com.tr · navigationledlight.com