ORDER CODE

310212

MOSNL50UD Signal Light Yellow 180°

Vessels under 50 m · 2 NM · 2.8 W · 24 V DC · IP67 · MED



Fig. 1 · MOSNL50UD double housing

Fig. 2 Horizontal sector

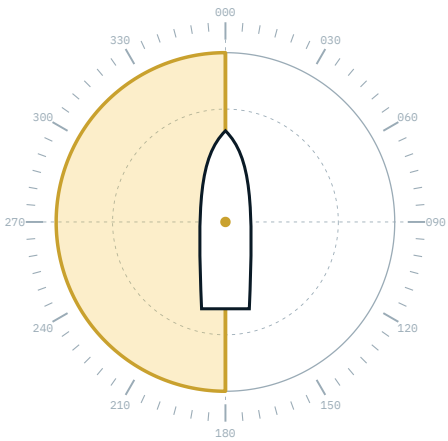

Shows a yellow light over 180° of the horizon on the port side, from right ahead to right aft.

LIGHT	
Type	Signal Light Yellow 180°
Colour	Yellow
Horizontal sector	180°
Visibility (range)	2 NM
Light source	High-power LED
LED lifetime	> 60,000 h

ELECTRICAL	
Supply voltage	24 V DC
Power consumption	2.8 W

MECHANICAL	
Housing	Hard-anodised, saltwater-resistant aluminium
Lens	UV-resistant quartz glass
Screws	Stainless steel
Dimensions (H × base × top)	154 × 110 × 75 mm
Mounting holes	4 × Ø7 mm on a 63.61 × 63.61 mm square
Weight	1500 g

ENVIRONMENT	
Protection class	IP67
Operating temperature	−25 °C to +85 °C

APPROVALS	
Marine equipment	MED Wheelmark, Directive 2014/90/EU, item MED/6.1
Standards	EN 14744:2005 + AC:2006 · IEC 60945:2002 + Corr.1:2008 · COLREG 72 Annex I

01 Dimensions

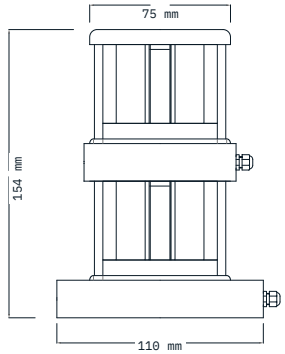

Fig. 3 · Side view, double housing · 154 × 110 × 75 mm

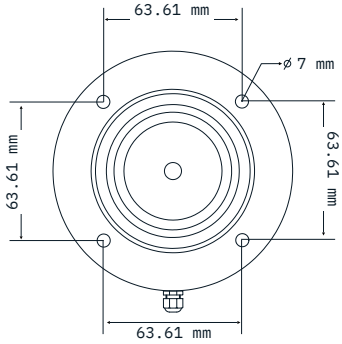

Fig. 4 · Plan view, mounting holes 4 × Ø7 mm

02 Design features

01

Built for salt water

Hard-anodised aluminium body, quartz glass lens and stainless steel screws.

02

Sealed to IP67

Dust-tight and protected against temporary immersion.

03

60,000+ hours

High-power LED source: years of service without lamp changes.

04

Thermal management

Epoxy-coated LED driver, protected for maximum service life.

05

−25 to +85 °C

Operating range for every climate and season at sea.

06

Maintenance friendly

No bulbs to replace, robust design for long intervals.

03 Ordering information

CODE	DESCRIPTION	VERSION
310212	MOSNL50UD Signal Light Yellow 180°	Standard version

04 Certificates

MED Module B
ME-C-0325/B/2/24
EC type-examination
Notified body 0437 · valid to 29.12.2027

MED Module D
ME-C-0696/D/1/26
Production quality assurance
Notified body 0437 · valid to 29.12.2027

05 Standards

EN 14744:2005 incl. AC:2006 – navigation lights

IEC 60945:2002 incl. Corr.1:2008 – maritime equipment, EMC and environment

COLREG 72, Annex I – positioning and technical details of lights

IMO Res. MSC.253(83) – performance standards for navigation lights

Marine Otomasyon Sistemleri Ltd. Şti.
Evliya Çelebi Mah. Rauf Orbay Cad. Ak İş Merkezi No:41/B, 34944 Tuzla – İstanbul, Türkiye
+90 216 447 12 90 · info@mos.com.tr · navigationledlight.com